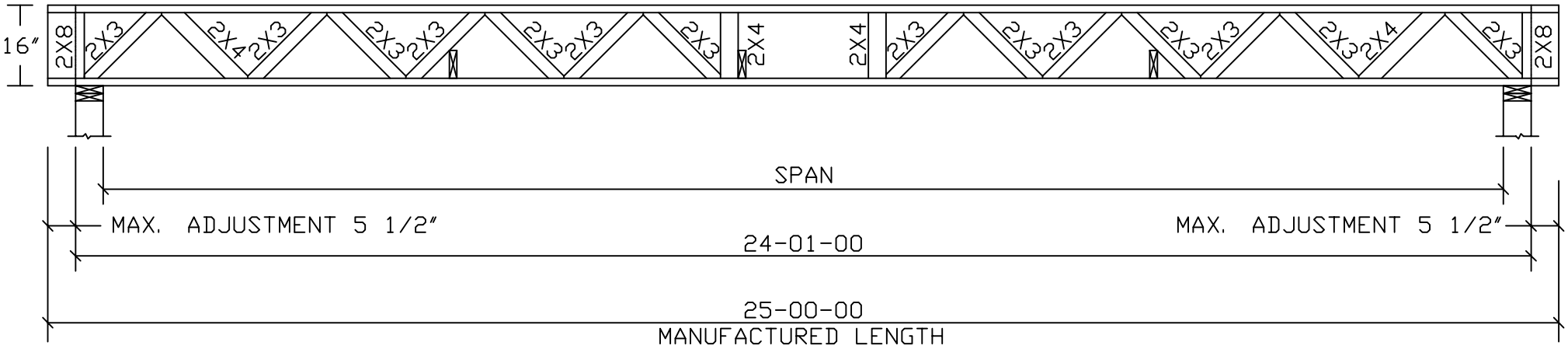
16"
2X8
2X3
2X4
2X3
2X3
2X3
2X3
2X3
2X3
2X4
2X4
2X3
2X3
2X3
2X3
2X3
2X3
2X4
2X3
2X8
SPAN
MAX. ADJUSTMENT 5 1/2"
MAX. ADJUSTMENT 5 1/2"
24-01-00
25-00-00
MANUFACTURED LENGTH